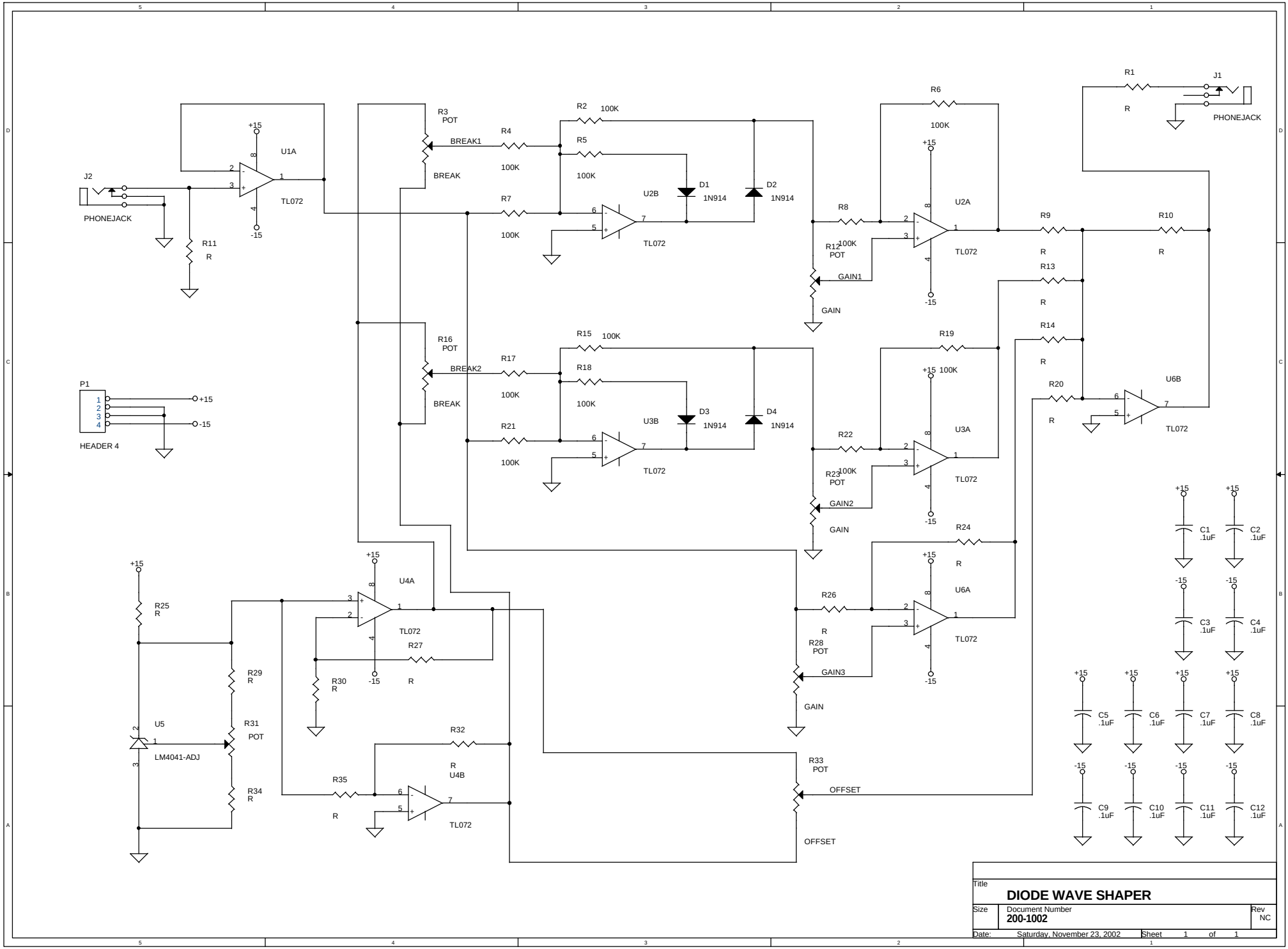

Title	**DIODE WAVE SHAPER**	
Size	Document Number **200-1002**	Rev NC
Date: Saturday, November 23, 2002	Sheet 1 of 1	