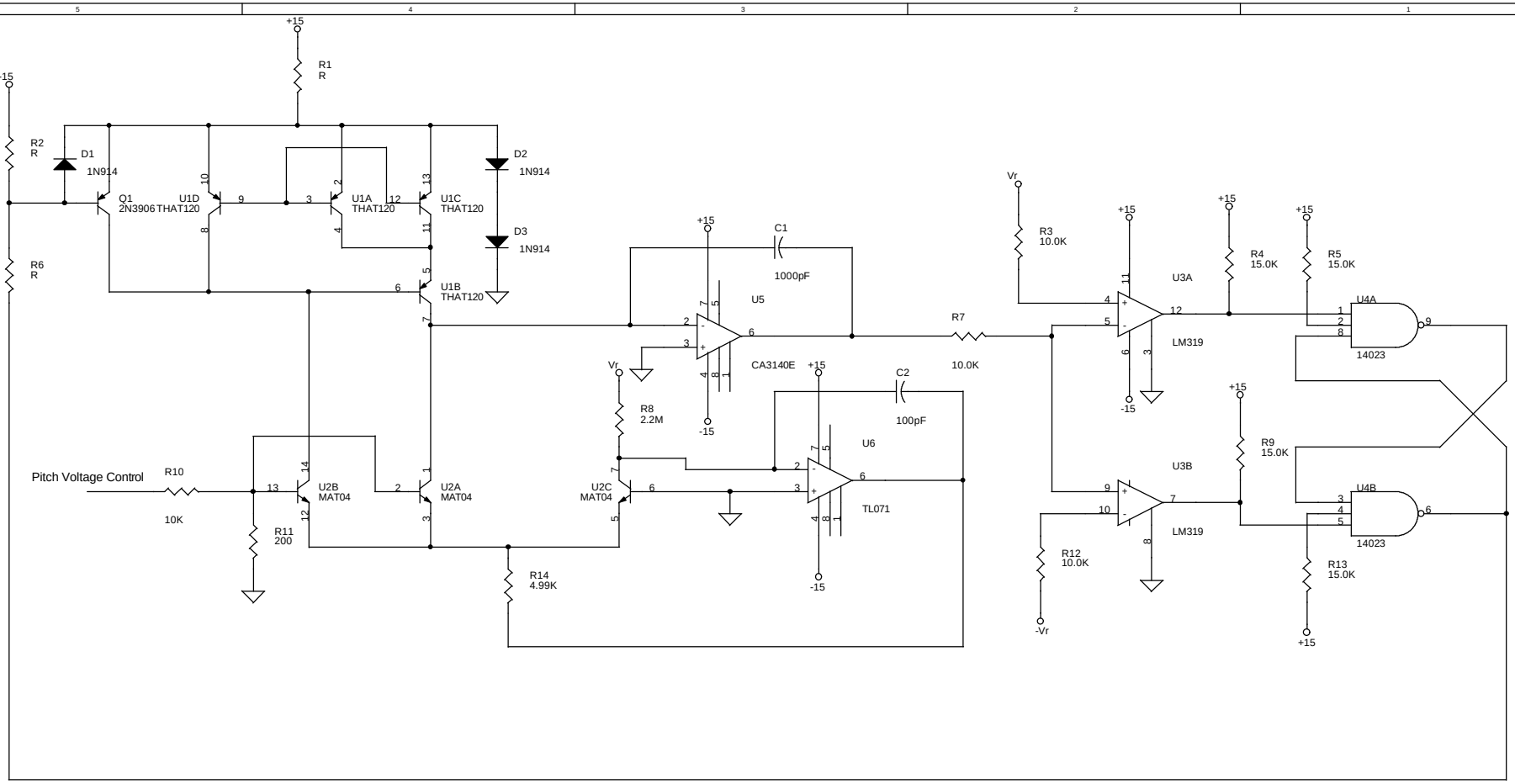

Title	**Idea For Triangle Oscilator**	
Size	Document Number <Doc>	Rev A
Date: Sunday, October 01, 2000	Sheet 1 of 1	